QUICK MILL
Mod. 4100



OPERATING INSTRUCTIONS

KAFFEGROSSISTEN

För dig som älskar kaffe

QUICK MILL thanks you for having purchased one of our products. Before using the machine we suggest you carefully read this manual to obtain the necessary information for correctly using and servicing the product. If you have any questions please contact your retailer or our offices.

FOTO 1



FOTO 2

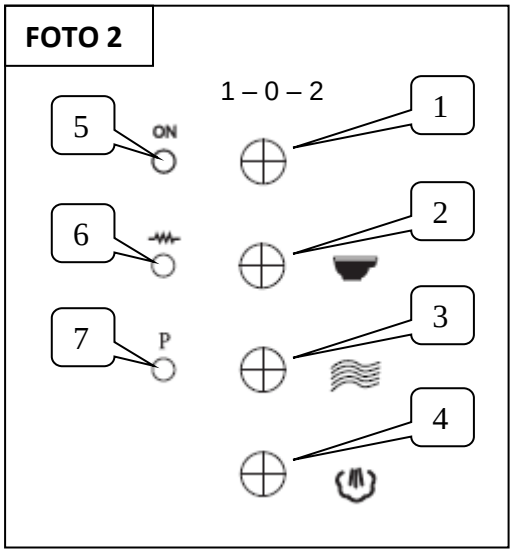

Rating plate identification diagram:

1 Manufacturer
2 Model
3 Power supply
4 Mains frequency
5 Registration number
6 Year of manufacture
7 Total power o the machine
8 Compliance markings

INTRODUCTION

Keep this instruction manual in a safe place. For any information or difficulties not fully explained, please contact the service personnel.

1. SYMBOLS



The warning triangle identifies all the explanations of an important nature for the safety of persons.
Follow these instructions to avoid accidents!

2 The numerical symbol, numbers or letters refer to illustrations and parts of the machine such as buttons, lights, etc.



The manufacturer assumes no responsibility for any damages in the event of:

- Uses not in accordance with the intended purposes;
- Alterations made to the power cable;
- Alterations made to any component part of the machine;
- Use of non-original components or accessories;
- Repairs not carried out by an authorised service centre;

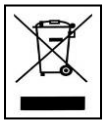

This product meets the labelling requirements set out in RAEE Directive (2002/96/CE). The symbol indicates that this electrical or electronic product must not be discarded with normal household waste. PRODUCT CATEGORY with references to the type of equipment listed in Annex 1 of the RAEE Directive. This product is in category 2, “Small domestic appliances”.
DO NOT DISCARD WITH NORMAL HOUSEHOLD WASTE

Failure to observe the above mentioned points voids the guarantee.

2. WARNING

- The packaging material (plastic bags, polystyrene, nails, cardboard, etc.) must not be left within the reach of children as they are potential sources of danger.
- Before connecting the machine to the power supply, make certain that the rating plate corresponds to the requirements of the electrical grid.
- The power cable must lie flat (avoid curling or overlapping) in a position which is not exposed to any impacts or handling by minors. It must not be placed near liquids, water or heat sources, and must not be damaged (if necessary have qualified personnel replace it).
- The use of adapters, multiple sockets and/or extensions is not advised. Whenever their use is absolutely necessary, only use products with quality certification markings (IMQ, VDE, +S, etc.), and ensure that the power rating stamp is higher than the absorption (A = amps) of the equipment to be attached.
- In the event of doubt or uncertainty, have qualified personnel check the electrical power supply which must correspond to the provisions required by the current safety regulations, including:
  - proper earthing;
  - conductor section is suitable for the absorption capacity;
  - efficient residual current device.
- Position the machine on a hydro-repellent surface (laminated, stainless steel, ceramic, etc.) away from heat sources (ovens, stove tops, fireplaces, etc.) and in an environment where temperature does not drop below 5 °C.
- Do not expose the machine to the elements, or install it in an environment with high humidity, such as a bathroom area.
- If the need for a replacement part arises, contact a distributor or Authorised Retailer and only used original spare parts.
- The machine in its packaging is to be stored in a dry location, free from humidity and protected from the elements. The temperature must not be lower than +5 °C.



In the event of damage to objects or persons caused by the improper installation or use, the manufacturer cannot be considered responsible.

3. DESCRIPTION

3.1 Features

The machine consists of a central boiler which performs the operations which supply the coffee, steam or hot water.

The outer shell of the machine is composed of a stainless steel structural frame.

3.2 Security

The boiler is equipped with a mechanical spring control valve to regulate overpressure up to a maximum 14 Bar and a thermal protector with manual reset which interrupts the heating in the case of failure.

The electromagnetic pump is equipped with a thermal protector with an automatic reset which protects against overheating.

All of the heating elements and parts under electric tension are within the panelling of the machine and are not externally accessible.

3.3 Vibrations

The machine is supplied with rubber vibration damping feet. In normal working conditions the machine does not generate vibrations which could damage objects or cause injury to persons.

4. TECHNICAL CHARACTERISTICS

Dimensions	cm. L 25 x H 37 x P. 28.5	
Weight	11,5 Kg.	
Electrical data		
Power supply	Rating	Current
110-120 V / 50-60 Hz	1280 W	12 W
220-230 V / 50-60 Hz	1280 W	6 W
Water tank capacity 1.8 Lt.		
Ambient working temperature +5 ° +45 ° C		

5. KEY (photo 1 e 2)

1. Main switch (ON/OFF/ON)
2. Coffee delivery switch
3. Water delivery switch/fill boiler
4. Vapour switch
5. Machine ON indicator light
6. Heating ON indicator light
7. Boiler full indicator light
8. Water/steam anti-scalding dispensing nozzle
9. Vapour/water tap handle
10. Water tank
11. Pressure gauge
12. Coffee delivery group
13. Filter holder
14. Discharge basin
15. Cup rest grille

6. INTENDED USE

The machine was designed and manufactured for the delivery of coffee and the preparation of hot drinks (tea, cappuccino, etc.)

Any other use is to be considered improper and therefore dangerous.

The operator must always comply with the instructions for use and maintenance in this manual.

In the event of doubt or irregularities during operation, stop the machine, refrain from performing direct repairs or interventions and contact the authorised service centre.

The operator must not:

- touch hot surface areas, ad must only use the controls provided;
- perform maintenance operations or transport the machine with the plug inserted or when the machine is hot;
- remove the plug by pulling on the power cable;
- use the machine if the power cable shows sign of damage;
- touch the machine with wet or damp hands or feet;
- turn over or lay the machine and packaging on its side.
- clean the machine using a direct spray or water under pressure, or with steam;
- immerse the machine in water or any other type of liquid;
- allow the machine to be used by unqualified persons or minors;
- lean liquid containers against the machine.

Whenever the machine appears to wet or overly damp, do not proceed with installation and use until it can be determined that the machine has completely dried.



In any event, it is necessary to have the service centre perform an inspection to ascertain if any damage has occurred to the electrical components.

Precautions for use



The machine is to be operated only for its intended use and not for any other purpose, such as the delivery of products which are not coffee or non-food products.

7. TRANSPORTATION AND HANDLING

7.1. Packaging

During transport, always keep the package in the correct position referring to the indications printed on the outside of the box.

Do not turn over or lay the machine and packaging on its side.

The packaging contains loose parts and accompanying documentation which is to be kept for further consultation.

- Open the upper part of the package, remove the accessories and then slip the machine from the wrapper.
- Check the integrity of the machine, the accessories, the power supply cable and plug, and in the event of damage contact the retailer immediately.



The packaging material (plastic bags, polystyrene, nails, cardboard, etc.) must not be left within the reach of children as they are a potential sources of danger.
Avoid release to the environment. Dispose of them at a local waste disposal company.

8. INSTALLATION

The machine is shipped ready for installation in accordance with the data found rating plate.
Ensure that the machine specifications comply with those of the local electrical power supply.
The electrical system must be equipped with an efficient residual current device or an automatic circuit breaker with an efficient earthing system. In the event no electrical safety device is present, have a qualified technician install a two pole rocker switch/thermal-magnetic circuit breaker as required by current safety regulations.



Proper earthing of the device is mandatory. The manufacturer declines all responsibility in the event this health and safety regulation is not respected.

Be careful not to damage the power supply cable by bending, crushing or stresses.
Do not disconnect the power supply to the machine by pulling on the cable. Disconnect by handling the plug.

To avoid difficulty regarding operation, supply or maintenance, do not position the machine in tight spaces.

- The surface where the machine is to be installed must be level, dry, durable and stable, and at a height of 80 cm from ground.
- Position the machine and connect the power supply cable to the electrical socket.

8.1. Control descriptions

Main switch.

1. Main switch
   Setting the switch to position 1, the machine is now ready to load the boiler; position 2 boiler heater and the green light 5 is lit. Always begin by turning the switch to position 1, and ensure there is water in the boiler by activating the pump (load heater or coffee) before moving the switch to Pos. 2.
2. Coffee delivery switch.
   Press the button to deliver coffee from the group.
3. Hot water delivery/load boiler switch.
   Press the button, with the steam tap in the open position, to deliver hot water, as shown by the lit orange indicator light 7.
4. Vapour delivery switch.
   Actuating the steam delivery button, the machine is ready for the delivery of steam.

NB. The two switches, 3 and 4, are used separately (the delivery of water may not be performed at the same time as the delivery of steam or vice versa).

6. Boiler heat resistance indicator light;
   It lights when the electric resistance element which heats the water in the boiler is operating.
7. Boiler full/hot water delivery indicator light.

9. Vapour delivery/hot water knob.
   Turn the knob in an anti-clockwise direction to deliver hot water or steam.

9. OPERATION

9.1 Filling with water

- Fill the water reservoir (use drinking water only, softened if possible).
- The machine may be equipped with a resin water scale filter. Before switching on the machine, let the filter soak in water to impregnate the resins (operation to be carried out the first time, after a long period when the machine is not in use, when the reservoir has been totally emptied or the filter is replaced).
- Insert the reservoir, making sure that the rubber dip tube is not crimped or bent.
- Remove the filter holder and open the steam tap, then turn the main switch to position 1 and actuate the deliver coffee switch 2, until water exits from the spout.
- When water exits from the vapour tube, close the tap and let water from the group flow for a few seconds, after which close the hot water switch. If, after 30 seconds, no water exits, repeat the operation.
- Once the boiler is full, turn switch 1 to position 2 to activate the heater.
- Attach the filter holder 13 with the filter inserted and wait for the machine to heat up and reach operating temperature.

9.2 Bringing the machine up to operating temperature

- Check the level of water in the reservoir.
- With switch 1 in position 2, the water in the boiler begins its increase to the operating temperature (indicator light 5 ON).
- Wait until the machine reaches operating temperature (indicator light 6 OFF).

When the machine is used for the first time, let approximately .5L of water flow through the machine at operating temperature to flush the hydraulic circuit.

9.3 Coffee delivery

- Remove the filter holder from its seat, turning it in the clockwise direction.
- Fill the filter with one or two doses of coffee (according to the filter inserted), using the appropriate doser.
- Compact the coffee with the presser
- Replace and tighten the filter holder in its seat, turning it in the anti-clockwise direction.
- Position the cups under the corresponding outlets beneath the filter holder.
- Press the coffee delivery switch 2, and after a few seconds coffee delivery begins. Once the desired amount is achieved, press the switch.

The water level in the reservoir 10 must be checked often, to avoid the pump sucking air during the coffee delivery stage and unexpectedly becoming noisy with a resulting drop in pressure.
In this case, immediately stop delivery, restore water to the reservoir and repeat the steps required to start the machine for service.
It is recommended to pay attention to the hot parts of the machine, especially the delivery group and the steam tap. Never place the hands under the steam spout or the group when their relative operations are being performed.

9.4 Steam delivery

- Press the steam switch 4, wait a few seconds and release the water from the steam nozzle 8, opening tap 9, then re-close it and wait until the steam temperature is reached (indicator light 6 OFF).
- Wait approximately 30 seconds until the indicator light 6 turns OFF, the machine is ready to deliver steam, then immerse the steam nozzle 8 in the liquid to be heated (milk, water, punch, etc.), turn special wheel 9; the steam which exits heats the liquid until the desired temperature is reached.

Do not release steam for longer than 4-5 minutes with refilling the boiler (as indicated in section 9.1)

- Once the drink is heated, release some steam to clean the sprayer outlet holes.
- Turn off the steam button 4 and using a damp cloth, clean the steam nozzle 8.
- Refill the boiler with water (section 9.1)

9.5 Making a 'cappuccio'

To achieve a cappuccio with a creamy foam, follow these steps:

- Use a tall, narrow container approximately half filler with milk.
- Immerse about half of the spout 8 in the liquid, turning handle 9 and bringing the milk to the desired temperature.
- Close the handle 9, pour the whipped, creamy milk into the cup.
- Restore the level of water in the boiler.

9.6 Delivery of hot water

- Place the container to be used to collect water below the water / steam nozzle 8.
- Turn the handle 9, opening the tap and press switch 3 to release the quantity of water desired.
- Close the handle and press switch 3, now it is OFF.

9.7 Expansion valve adjustment (pressure pump)

Beneath the front panel, near the spout of the water/steam nozzle, there is an adjustable valve which allows the pressure of the coffee delivery pump to be adjusted. To adjust the pressure, proceed as follows:

- Insert the blind filter (supplied) in the filter holder.
- Start the delivery of water as when making a coffee, pressing switch 2.
- Wait for the machine to reach its maximum pressure and turn the adjustable screw on the valve.
- Turn in a clockwise direction to lower the pressure in the circuit and clockwise to increase the pressure in the circuit.

It is recommended that the pressure in the circuit is set to between 9 and 10 Bar.

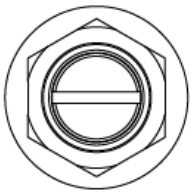

10. MAINTENANCE

Maintenance operations are to be performed with the machine turned OFF and when cold, with the power supply disconnected from the mains.
For cleaning do not use any metals or abrasives such as steel wool, wire brushes, needles, etc., as well as corrosive or abrasive detergents. Always use a damp cloth or sponge or one soaked in alcohol.

10.1. Daily

- Clean the outer body with a damp cloth or one soaked in alcohol.
- Clean the spout of the steam nozzle 8.

- Clean the spray units and the seals under the casing of the delivery units using the special brush supplied.
- Check and, if necessary, clean the drain pan.
- Rinse the filters and the filter holder with hot water and a cloth or sponge. Carefully remove any coffee residues or deposits.

10.2. Periodic cleaning of the machine or after a period of intense use.

In addition to daily cleaning, perform the following operations:

- Immerse the filters and the filter holder 13 in boiling water for a few minutes to dissolve coffee greases and oils, then use a cloth or a sponge to remove them completely.
- Clean the water reservoir 10 taking care to reposition the rubber tube with the filter until it touches the bottom of the reservoir (do not use a dishwasher for this).

10.3. Extraordinary maintenance

The machine is supplied with a blind filter used to clean the group and the solenoid valve. This operation must be performed at least once a week to remove coffee deposits in the circuit.

- Remove the filter holder 13 from the group 12.
- Remove the filter from the filter holder 13.
- Insert the blind filter in the filter holder 13.
- Attach the filter holder 13 to the group 12.
- Start coffee delivery with button 2 for approximately 15 seconds, then stop delivery.
- Repeat the operation described in point 6 for 10-15 times.
- Remove the filter holder and the blind filter.



During cleaning operations using the blind filter, boiling water will be discharged into the drain pan14. Pay attention to possible splashing water which could exit from the cup rest grille. The procedure for cleaning the group may be performed with the aid of a degreasing product, specific for coffee machines. In this instance, follow the instructions of use for the product to be used.

11. DECOMMISSIONING

11.1. Temporary

- Empty the water reservoir 10 and the spill basin.
- Close all switches and remove the power plug from the mains.
- Perform the maintenance operations.
- Store the machine in a dry environment, protected from the elements and with limited access (avoid leaving it in the reach of minors or unfit persons).

11.2. Definitive

Besides carrying out the operations necessary for a temporary stop, do the following:

- Cut or eliminate the power cable;
- Pack the machine in cardboard or other packing material and send it to authorised personnel for its disposal or second-hand sale).

12. PROBLEMS AND REMEDIES



In the event the power cable is damaged, contact an authorised service centre to have it replaced.

The disposable materials used for processing or maintenance, if non-biodegradable or are pollutants, should be placed in separate containers and sent to special waste disposal centres.

Inspections which can be performed by the user are to be performed only after the electrical power supply has been isolated.

A) The machine does not start:

- Check that the plug is connected to the mains.
- Check that there is power supply available and that the residual current device is inserted and the main switch is in the ON position.
- Check the condition of the plug and the power supply cable; if damaged have them replaced by qualified personnel.

B) No coffee is delivered:

- No water in the reservoir; refill and repeat the operations in section 9.1 (Filling with water).
- The level of water in the boiler was not restored after the delivery of steam.

C) No hot water or steam delivery:

- No water in the reservoir; refill with water.
- The level of water in the boiler was not restored after the delivery of steam. Nozzles or steam spout clogged; clean the nozzles of the sprayer outlet of the steam spout.

E) Irregular delivery of coffee:

- Clean the filter in the filter holder.
- The coffee grounds are too fine or too coarse.



For any other type of irregularity or problem which has not been specified, unplug the power supply cable, avoid performing any direct repairs or inspections and contact a qualified technical service centre.

Il gusto della perfezione